Dry Ice Blasting Unit

ASCOJET 2008 Combi Pro

complete (fully adjustable) **part no. 901050**

The **ASCOJET 2008 Combi Pro** combines a powerful double hose system, which can be optionally used as a one-hose system, with the option of cleaning with dry ice pellets and the additional abrasive effect of an additive. Thus, users can choose from two blasting options, namely pure dry ice blasting or combination blasting.

Designed specifically for the high-end sector, the **ASCOJET 2008 Combi Pro** is ideal for maximum performance and time savings.

Powerful and handy blasting gun:

Thanks to a **quick connect coupling** the gun can be attached to the blasting unit very easily.

Increased security thanks to the **locking pin**, which makes a sudden opening of the locking mechanism of the nozzle impossible.

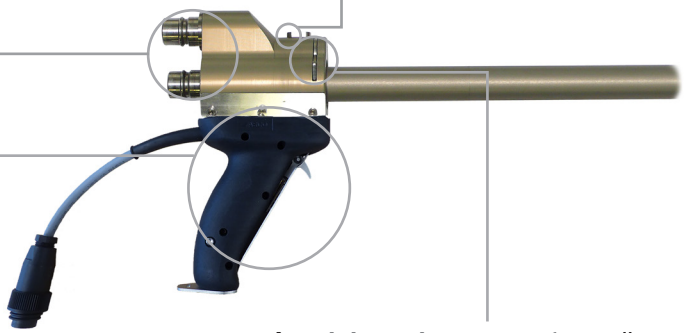

The **ergonomic gun handle** ensures very easy handling and comfortable operation when blasting over longer periods. The new developed safety button is ideal for left and right-hander.

A **quick exchange system** allows nozzles to be changed within seconds without any tools.

Specifications

Material:	frame and cover sheets made of powder-coated steel
Dimensions (L × W × H) (inkl. wheels & handle):	752 x 608 x 1'103 mm (30 x 24 x 44 in)
Weight empty:	approx. 115 kg (253 lb)
Content of pellet hopper:	approx. 23 kg (51 lb)
Content of box for additive:	approx. 12 kg (27 lb) (depending on additive)
Blasting pressure with additive:	3 - 8 bar (44 - 116 psi) (adjustable)
Blasting pressure w/o additive:	0 - 20 bar (0 - 290 psi) (adjustable)
Blasting pressure 2 hose:	0 - 20 bar (0 - 290 psi) (adjustable)
Blasting pressure 1 hose:	0 - 10 bar (0 - 145 psi) (adjustable)
Dry ice consumption:	25 - 80 kg/h (55 - 176 lb/h) (stepless)
Additive consumption:	up to 25 kg/h (55 lb/h) (depending on blasting pressure)
Voltage:	230 V, 50 Hz, 1 Ph (other voltages on request)
Max. power consumption:	600 W (0.8 HP) nominal
Inlet hose connection:	3/4" BSP female 3/4" Claw coupling fitted

ASCOJET 2008 Combi Pro: Special features

Double hose system
for maximum performance

Optional 1- or
2-hose-system

Container for additive with
approx. 12 kg (26.5 lb) capacity

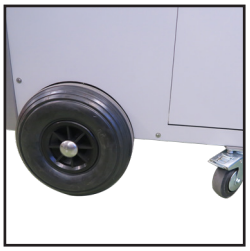

Highly manoeuvrable

Integrated grounding roll
for more safety

Optimum pellet flow thanks to
maintenance-free electric vibrator

ASCOJET 2008 Combi Pro: Standard scope of supply

Pos. 001

Blasting gun HP

part no. 4063750

Standard for the ASCOJET 2008 Combi Pro
Length: 45 cm (17.7 in)
Weight: 1.75 kg (3.9 lb)
Blasting pressure: 0 - 20 bar (0 - 290 psi)
(Blasting gun HP6 N without nozzle part no. 4064798)

HP

including the corresponding blasting nozzle

High performance barrel nozzle HP255

part no. 4045393

Standard for the blasting gun HP
Powerful nozzle
Outlet opening: approx. Ø 20 mm (0.8 in)
Length: 33 cm (13.0 in)
Inner diameter: 14 mm (0.6 in)

Pos. 002

Hose assembly 7.5 m (24.6 ft) for HP gun

part no. 4046952

Standard for the ASCOJET 2008 Combi Pro. Can also be used as an extension of the hose assembly.
Incl. buckling protection on both sides of the compressed air hose, incl. control cable, grounded

HP

Pos. 003

Hose assembly 7.5 m (24.6 ft) for OHP gun additive

part no. 4061696

Standard for the ASCOJET 1708

OHP

ASCOJET 2008 Combi Pro: Standard scope of supply

Pos. 004

Protective hood for ASCOJET 1701/1708/2008

part no. 4065213

The newly developed hood for our blasting equipment protects the control elements from contamination. The transparent cover can be opened for easy view on and access to the operation elements. For cleaning the hood can easily be taken off.

Pos. 005

Claw coupling with 19 mm (3/4") male thread

part no. 4045949

For fast connection and disconnection of the air line to the blasting equipment

Already mounted on the unit.

Pos. 006

Power cable 10 m (32 in)

part no. 4053647

Pos. 007

Tool case ASCOJET 2008 Combi Pro Complete

part no. 4064576

see below:

ASCOJET 2008 Tool Case part no. 4064576: Scope of supply

Pos. 001

Tool case ASCOJET 2008 Combi Pro

Art.-Nr. 4064576

Consisting of:

Pos. 002

Tool case ASCOJET 2008 Combi Pro Empty

Art.-Nr. 4064579

Empty tool case with matching insert

OHP

Pos. 003

Blasting gun additive OHP

Art.-Nr. 4064796

Standard for the ASCOJET 2008 Combi Pro
incl. protective glove additive (part no. 4061690)

OHP

including the corresponding blasting nozzle

Blasting nozzle additive

Art.-Nr. 4061580

Standard for the ASCOJET 2008 Combi Pro

ASCOJET 2008 Tool Case part no. 4064576: Scope of supply

Pos. 004

High performance barrel nozzle 709.23/15

part no. 4047144

Standard for the blasting gun OHP
Most powerful nozzle of the ASCOJET single-hose system
Outlet opening: approx. Ø 15 mm (0.6 in)
Length: 23 cm (9 in)
Inner diameter: 9 mm (0.4 in)

OHP

Pos. 005

High performance barrel nozzle HP275

part no. 4045394

Increases the cleaning performance with same working pressure

Outlet opening: approx. Ø 24 mm (1.0 in)
Length: 32 cm (12.6 in)
Inner diameter: 15 mm (0.6 in)

HP

Pos. 006

Flat nozzle 213.32/60

part no. 4046903

Newly designed nozzle with optimized geometry for better performance on large areas

Outlet opening: approx. 60 × 5 mm (2.36 x 13/64 in)
Length: 33 cm (13.0 in)
Inner diameter: 13 mm (0.5 in)

HP

Pos. 007

Lighting kit for dry ice blasting gun

part no. 4064129

Compact torch
LED light 160 lumen, 160 cm (63 in)
Up to 25 hours battery life (3 x 1.5V AAA)
Batteries not included in scope of supply
Length: 10.6 cm (4.2 in)
Weight: 120 g (0.4 lb)

OHS
OHP
HP

ASCOJET 2008 Combi Pro: Options

Pos. 001

Barrel nozzle long HP2

part. no. 4045395

The nozzle is designed to allow for a comfortable working position of the person in charge

Outlet opening: approx. Ø 20 mm (0.8 in)
Length: 52 cm (20.5 in)
Inner diameter: 14 mm (0.6 in)

HP

Pos. 002

Protective sleeve for double hose system 220 mm (8.7 in)

part. no. 4047266

To protect the control cable and blasting hose from dirt and damages

Available in meters

HP

ASCOJET 2008 Combi Pro: Options

Pos. 003

Blasting gun OHP

part no. 4063749

To use the ASCOJET 2008 Combi Pro as a one hose system along with the hose assembly OHP (part no. 4045987)

Length 33 cm (13.0 in)
Weight: 1.05 kg (2.3 lb)
Blasting pressue: 0 - 10 bar (0 - 145 lb)

OHP

including the corresponding blasting nozzle

High performance barrel nozzle 709.23/15

part no. 4047144

Standard for the blasting gun OHP
Most powerful nozzle of the ASCOJET single-hose system
Outlet opening: approx. Ø 15 mm (0.6 in)
Length: 23 cm (9 in)
Inner diameter: 9 mm (0.4 in)

Pos. 004

Hose assembly 7.5 m (24.6 ft) ID 16 mm (0.63 in) for OHP gun

part no. 4045987

To be used with blasting gun OHP (part no. 4047312).
Can also be used to extend the hose assembly

OHP

incl. control cable, grounded

Pos. 005

High performance barrel nozzle 709.17/14

part no. 4045402

To be used with the blasting gun OHP (part no. 4063749)
Powerful and handy nozzle

OHP

Outlet opening: approx. Ø 14 mm (0.6 in)
Length: 17 cm (6.7 in)
Inner diameter: 9 mm (0.4 in)

Pos. 006

Barrel nozzle short 709.09/11

part no. 4045403

Powerful nozzle to clean in narrow spaces,
to be used with the blasting gun OHP (part no. 4063749)

OHP

Outlet opening: approx. Ø 11 mm (0.4 in)
Length: 9 cm (3.5 in)
Inner diameter: 9 mm (0.4 in)

Pos. 007

Flat nozzle 709.23/45

part no. 4047216

Powerful nozzle suitable for blasting large areas

OHS
OHP

Outlet opening: approx. 45 x 3.5 mm (1.77 x 0.14 in)
Length: 23 cm (9 in)
Inner diameter: 9 mm (0.4 in)

ASCOJET 2008 Combi Pro: Options

Pos. 008

Barrel nozzle special 709.42/15

part no. 4047141

The nozzle is designed to allow for a comfortable working position of the person in charge

Outlet opening: approx. Ø 15 mm (0.6 in)
Length: 42 cm (16.5 in)
Inner diameter: 9 mm (0.4 in)

OHP

Pos. 009

Angled nozzle 709.28/11/45°

part no. 4047219

A powerful nozzle for very confined spaces and difficult to reach spots

Outlet opening: approx. Ø 11 mm (0.4 in)
Length: 28 cm (11 in)
Inner diameter: 9 mm (0.4 in)

OHP

Pos. 010

Angled nozzle 709.25/11/75°

part no. 4047220

A powerful nozzle for very confined spaces and difficult to reach spots

Outlet opening: approx. Ø 11 mm (0.4 in)
Length: 25 cm (9.8 in)
Inner diameter: 9 mm (0.4 in)

OHP

Pos. 011

Pellet-Cutter OHP

part no. 4047257

For cleaning sensitive surfaces.
To be used with blasting gun OHP (part no. 4063749) and hose assembly OHP (part no. 4045987)

With safety quick connect coupling, 2.5 m (8.2 ft) hose and control cable, grounded

OHP

Pos. 012

Converter coupling ASCOJET 2008 Combi Pro

part no. 4047040

This converter coupling makes it possible that the OHS gun with the corresponding blasting hose of the ASCOJET 1208 can be connected to the ASCOJET 2008 Combi Pro
Length: 7.8 cm (3.0 in)
Weight: 0.2 kg (0.4 lb)
Outlet opening: approx. Ø 34 mm (1.3 in)

OHS

ASCOJET 2008 Combi Pro: Options

Pos. 013

Blasting gun OHS

Art.-Nr. 4063745

Standard for the ASCOJET 1208
Length: 26 cm (10.3 in)
Weight: 1.0 kg (2.2 lbs)
Blasting pressure: 0 - 10 bar (0 - 145 psi)

including the corresponding blasting nozzle

OHS

High Performance barrel nozzle 707.15/12

Art.-Nr. 4047321

Standard for the blasting gun OHP
High performance nozzle with low air consumption
Outlet opening: approx. Ø 12 mm (0.5 in)
Length: 15 cm (6 in)
Inner diameter: 7 mm (0.3 in)

Pos. 014

Hose assembly 5 m (16.4 ft) for OHS gun

Art.-Nr. 4047104

Standard for the ASCOJET 1208, can also be used as an extension of the hose assembly
incl. control cable, grounded

OHS

Pos. 015

Nozzle extension 700.150 OHP/OHS

Art.-Nr. 4046018

Modular nozzle extension for OHS and OHP dry ice blasting guns with a total length of up to 1.5 m (59 in) with nozzle

Length 1: 455 mm (18 in) without nozzle
Length 2: 580 mm (23 in) without nozzle
Length 3: 835 mm (33 in) without nozzle
Length 4: 960 mm (38 in) without nozzle
Length 5: 1340 mm (53 in) without nozzle

Weight in full length: 1.50 kg (3.3 lb)
Inner diameter: 10 mm (0.4 in)
Material: aluminium
Inner diameter: 7 mm (0.3 in)

OHS
OHP

Pos. 016

Barrel nozzle 707.09/10

Art.-Nr. 4047228

Thanks to an inner diameter of only 7 mm (0.3 in) the barrel nozzle has a very economical air consumption but is nevertheless powerful

Outlet opening: approx. Ø 10 mm (3/8 „)
Length: 9 cm (3.6 in)
Inner diameter: 7 mm (0.3 in)

OHS
OHP

ASCOJET 2008 Combi Pro: Options

Pos. 017

Thanks to an inner diameter of only 7 mm (0.3 in) the barrel nozzle has a very economical air consumption but is nevertheless powerful

Outlet opening: approx. Ø 12 mm (0.5 in)
Length: 15 cm (6 in)
Inner diameter: 7 mm (0.3 in)

OHS
OHP

Art.-Nr. 4047321

Pos. 018

Angled nozzle 708.28/10/45°

A powerful nozzle for confined spaces with low air consumption

Outlet opening: approx. Ø 10 mm (0.4 in)
Length: 28 cm (11.0 in)
Inner diameter: 8 mm (0.3 in)

OHS
OHP

Art.-Nr. 4047222

Pos. 019

Angled nozzle 708.28/10/75°

A powerful nozzle for confined spaces with low air consumption

Outlet opening: approx. Ø 10 mm (0.4 in)
Length: 25 cm (9.9 in)
Inner diameter: 8 mm (0.3 in)

OHS
OHP

Art.-Nr. 4047223

Pos. 020

Nozzle extension 700.62 OHP/OHS

Modular for nozzle extension for OHS and OHP dry ice blasting guns with a length of 668 mm (26.3 in)

Weight: 0.6 kg (1.3 lb)
Inner diameter: 10 mm (0.4 in)
Material: aluminium

OHS
OHP

Art.-Nr. 4063373

Pos. 021

Spare parts kit ASCOJET 2008 Combi Pro

Includes a recommended selection of spare parts to ensure constant operation.

OHS
OHP

part no. 4064990

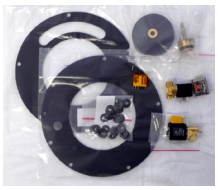

Sample image

Pos. 022

Compressed air hose 7.5 m (24.6 ft)/ ID 25 mm (1 in)

Connecting hose between air compressor and dry ice blasting machine, incl. claw coupling and safety ring for fast and easy connection / disconnection
Material: Fabric hose / metal
Dimension: 7.5 m (24.6 ft)
Weight: 2.4 kg (5.6 lb)

part no. 4045955